TABLE

- POWER
- GROUND
- PHYSICAL PIN
- CONTROL
- ANALOG
- TIMER & CHANNEL
- USART
- SPI
- I2C
- CAN BUS
- USB
- MISC
- BOARD HARDWARE

Standard Pin

PWM Pin

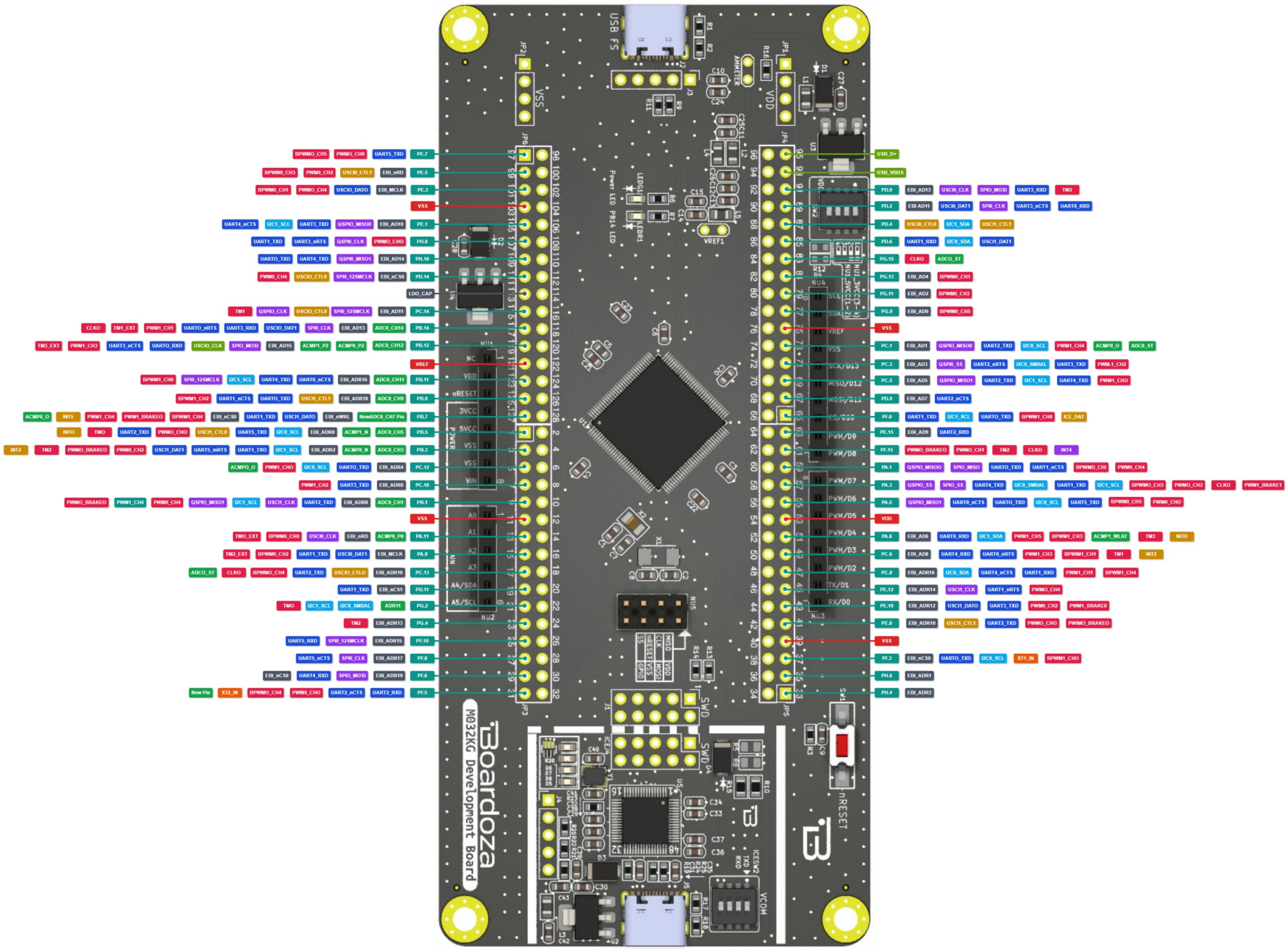

TABLE

- POWER
- GROUND
- PHYSICAL PIN
- CONTROL
- ANALOG
- TIMER & CHANNEL
- USART
- SPI
- I2C
- CAN BUS
- USB
- MISC
- BOARD HARDWARE

Standard Pin

PWM Pin

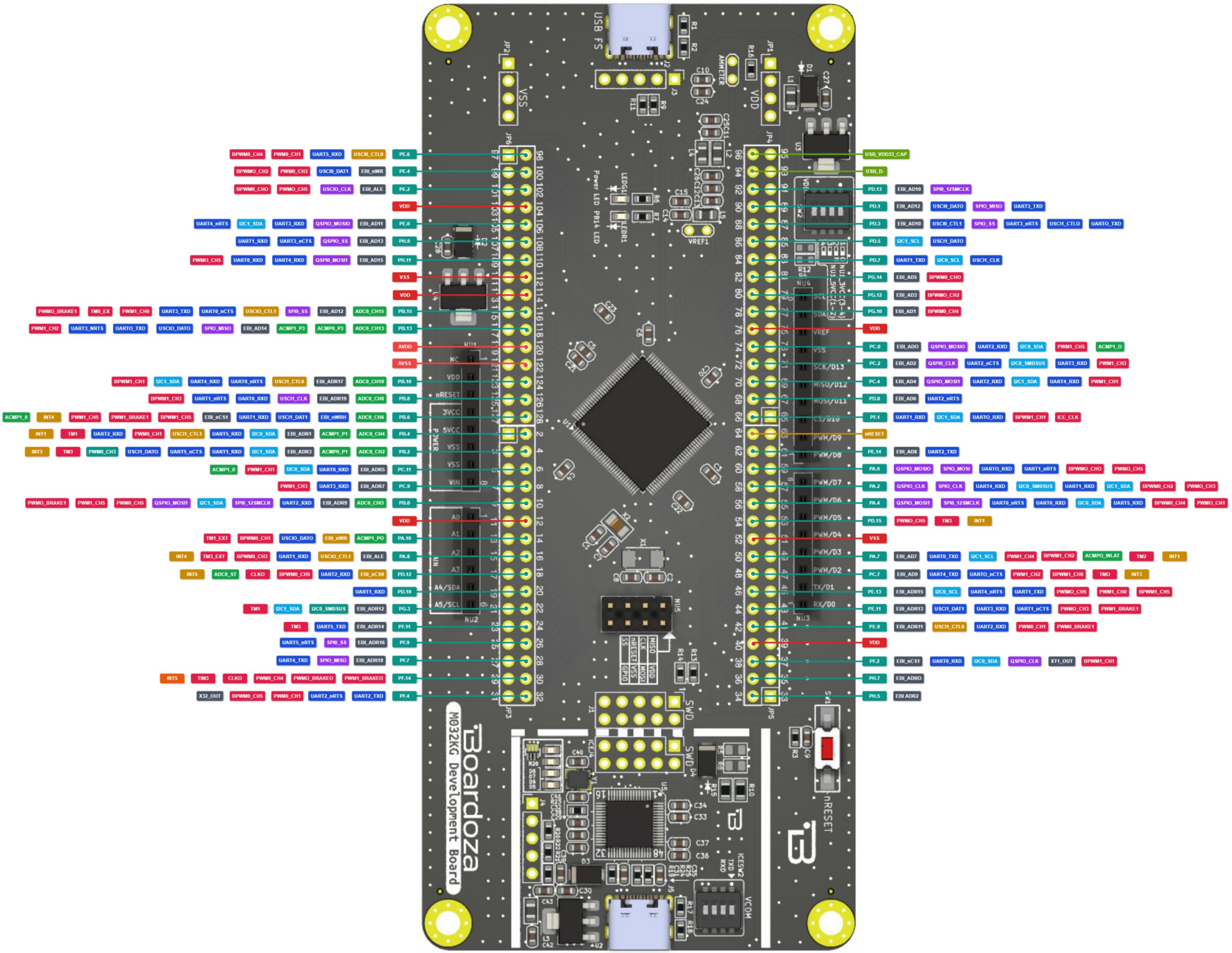

TABLE

POWER
GROUND
PHYSICAL PIN
CONTROL
ANALOG
TIMER & CHANNEL
USART
SPI
I2C
CAN BUS
USB
MISC
BOARD HARDWARE

— Standard Pin
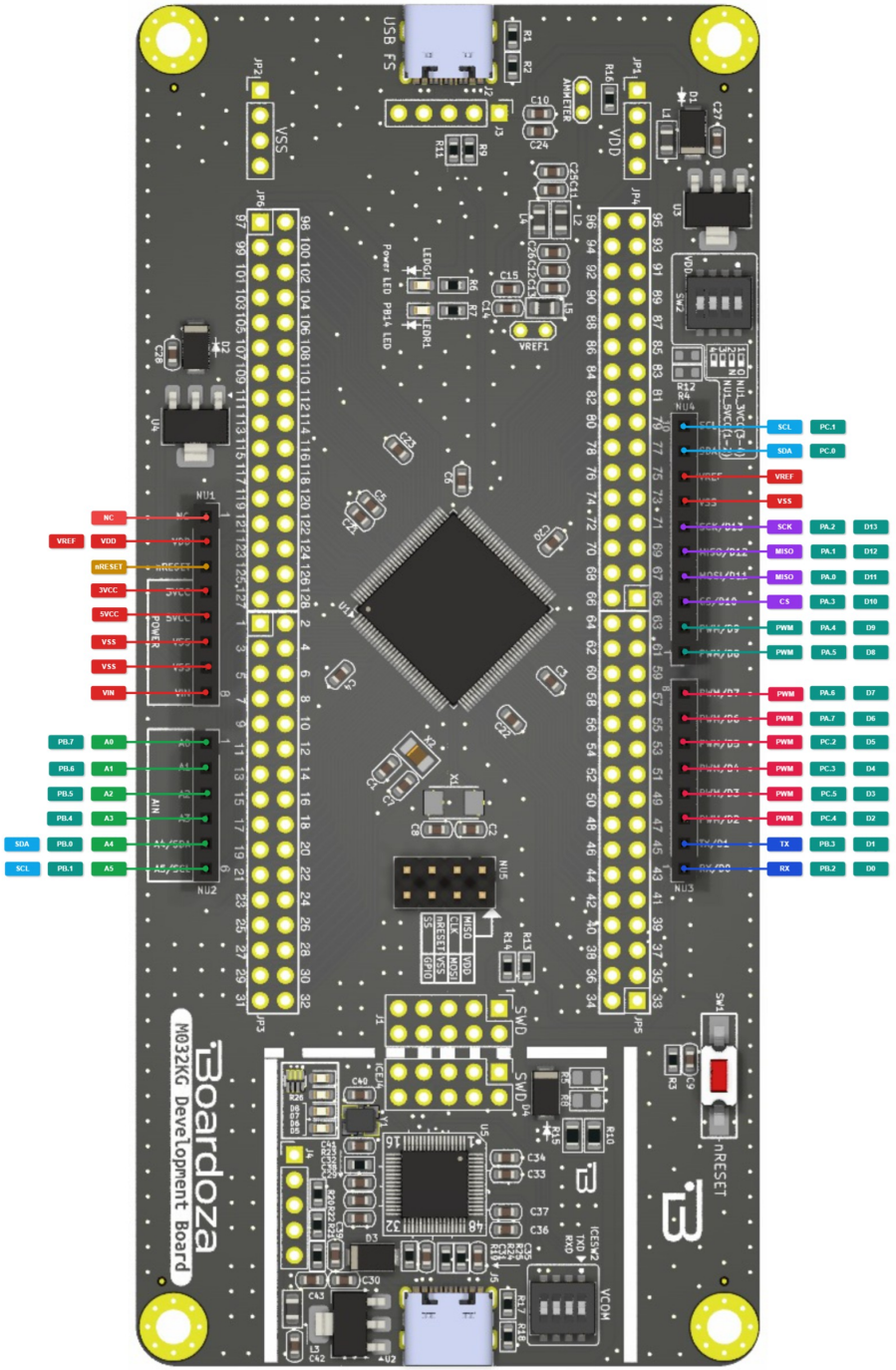
~ PWM Pin